# Aero-Tech
# Aerobic Treatment Units

2900 Gary Drive • Plymouth, IN 46563
Phone 574-935-0908 • Fax 574-935-0910

**Class 1 ANSI/NSF Standard 40**
**Wastewater Treatment Plant**

## AT Series

Owners Instruction Manual
Installation Manual, Operating Manual,
Design Drawings and Specifications, Service Policy,
Limited Warranty

| | |
|---|---|
| **Model AT-500** | **500 G.P.D.** |
| **Model AT-600** | **600 G.P.D.** |
| **Model AT-750** | **750 G.P.D.** |
| **Model AT-1000** | **1000 G.P.D.** |
| **Model AT-1500** | **1500 G.P.D.** |

NSF®

Certified to NSF/ANSI Standard 40

# INTRODUCTION

**AERO-TECH** is one of the world's finest aerobic treatment systems. The **AERO-TECH** system converts wastewater from your home or business into a clear odorless liquid. Our efficient operating system offers a lower operating cost than other units do. The long lasting submersible aerator pump helps to make **AERO-TECH** the most trouble free aerobic treatment system on the market today. This low cost, highly effective system is one that will continue to be looked at as the standard-bearer for the onsite wastewater industry for years to come.

This manual contains information on the AT-500, AT-600, AT-750, AT-1000, and AT-1500 wastewater treatment plants. These units are to be installed with our RLC panel (remote located control panel) and a pre-treatment tank. In addition, the system may have a pump tank, dosing tank, alarm system, chlorinator, de-chlorinator, and various disposal systems (drip irrigation, spray irrigation, gravel drain field, pressure dosing).

# PROCESS DESCRIPTION

***The* AERO-TECH *AT Series aerobic treatment plant is extended aeration, activated sludge process.***

***Wastewater enters the 4" inlet pipe from the home or business. The wastewater is then infused with air from the submersible aerator pump at the bottom of the aerobic treatment plant. This powerful, highly effective pump mixes air from the surface with wastewater in the bottom of the tank. The venturi created by the pump pulls fresh air from the surface and mixes it with the effluent from the bottom of the tank, the finely diffused air bubbles are then pushed through the exhaust ports into the mixing chamber in a swirling motion. As the finely diffused air rises, it creates a swirling motion, keeping the sludge in a constant state of suspension. As new wastewater enters the mixing chamber, it hydraulically displaces the mixed liquor into the clarifying cone.***

***In the clarifying chamber, the liquid is suspended in the quiet zone, allowing the remaining suspended solids to settle back into the mixing chamber to be further treated.***

***The clear water in the upper clarifying chamber is then discharged through the surge resistant pick up into the disposal system of your choice.***

# OPERATING INSTRUCTIONS

If a problem occurs with your **AERO-TECH** Aerobic Wastewater Treatment system or service is required, please call your service provider listed on the control panel cover. The local **AERO-TECH** dealer who installed your unit will perform routine maintenance on it for the first two years at no cost to the customer. After the initial two year warranty period provided by the initial installer, you may obtain a continuing service policy on an annual basis from a local service company that has been trained and certified by **AERO-TECH.** Regular scheduled maintenance is required to keep your plant operating at its highest level. This service is available at a nominal fee.

After your unit has been started by your installer, all you need to do is begin using the facilities (kitchen, laundry, toilets) as normal. The bacteria in the wastewater from your home will start the process working. Do not add any over the counter products or home remidies to the system. These will do more harm than good and can void your warranty.

The following items are **not** to be put into your aerobic treatment system:

1. Non-biodegradable items such as cigarette butts, match sticks, disposable diapers, feminine hygiene products, condoms, hair, coffee grounds, rags, paper towels, bandages, or other similar products. All of these items should be disposed of in your regular trash service.
2. No fats, oils or grease. This includes all cooking grease as well as all cooking oils.
3. No paints paint thinners or other household chemicals including most cleaning compounds and mop water.
4. No water softener backwash into the treatment plant.
5. No pesticides, herbicides, or other toxic chemicals.
6. No lemons, oranges, grapefruit or other citrus products.
7. No antibiotics or other medicines.
8. Disinfectants and bleaches, especially those with chlorine and ammonia.
9. Antibacterial soaps and antibacterial laundry detergents to reduce the risk of killing the aerobic bacteria.
10. Kitchen garbage disposals should only be used at a minimum. All food waste should be put into the solid waste disposal bin. Food waste will overload the system and cause a malfunction and more frequent pump-outs.

The proper use of the Aero-Tech Aerobic Treatment System or any other on-site sewage system depends on the proper organic loading and the life of the micro-organisms. Aero-Tech is not responsible for the in-field operation of the system, other than the structural and mechanical workings of the system. Abuse and/or overloading of the system can only be corrected by the user of the system.

Our system is rated for a maximum volume throughput per day, AT-500 is 500 gallons per day (GPD), AT-600 is 600 gallons per day (GPD), etc. ONLY household wastewater from sinks, tubs, washing machines, toilets, etc should be allowed into the unit. Volumetric overloading is a very serious abuse of the system. Volumetric overloading means putting more than the rated amount of wastewater through the system during a 24 hour period. To avoid volumetric overloading of your system, please observe the following:

1. Constantly watch for flowing/leaking toilets and facets. Repair immediately.
2. Use low flow devices whenever possible.
3. Avoid multiple wash loads in one day. Laundry should be spread out during the week; not all in one day.
4. Be on the alert for all excessive water use.

# INITIAL SERVICE POLICY

Our company_____, will inspect and service your AERO-TECH Aerobic Treatment System for the first two years from the date of installation. There will be a minimum of four inspections during this time, or more as local regulations dictate. This is to include inspecting and adjusting all mechanical, electrical, and other components as needed.

An effluent quality inspection will be done at this time. This will consist of a visual check for color, turbidity, sludge build up, scum overflow and odor.

At the conclusion of this initial service policy, our company will offer a continuing service policy to cover labor for normal maintenance, inspection and repairs. This is available for a nominal cost on a yearly basis.

User/owner operation instructions must be strictly followed or warranties can be voided. This is to include shutting off power to the system, disconnecting the alarm, restricting air intake, overloading the system, introducing excessive amounts of harmful matter into the system Or any other form of system abuse.

The owner shall be immediately notified in writing of improper operation that cannot be corrected at the time of the routine inspection or emergency service with an estimated date of correction.

IF NECESSARY, PUMPING OF SLUDGE FROM THIS UNIT IS NOT INCLUDED IN THIS POLICY.

| OWNER | | SERVICE DEALER |
|---|---|---|
| _____ | Company: | _____ |
| _____ | Address: | _____ |
| _____ | City/State/Zip: | _____ |
| _____ | Phone: | _____ |
| Date: _____ | | Date: _____ |

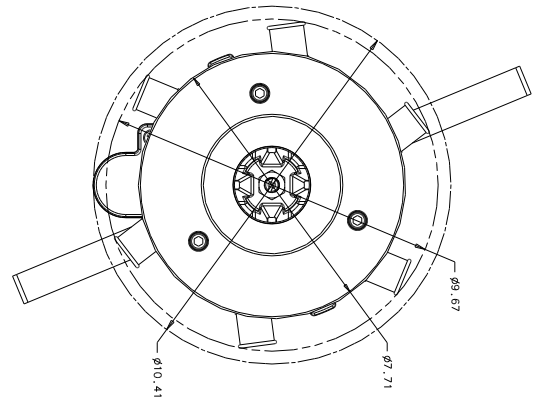


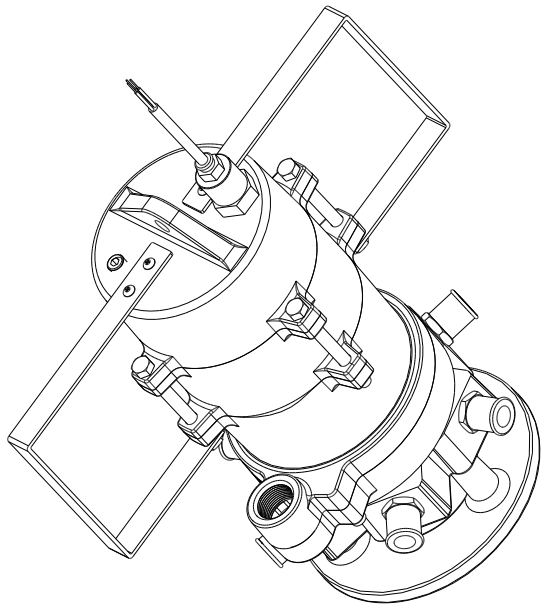

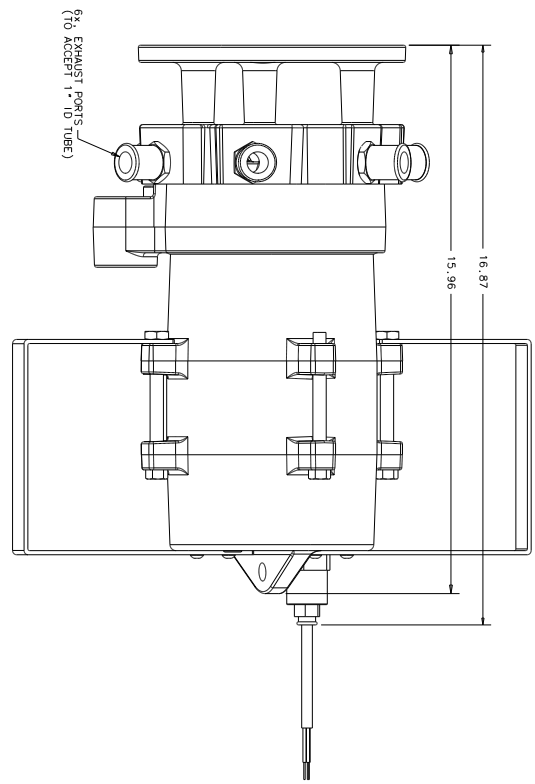


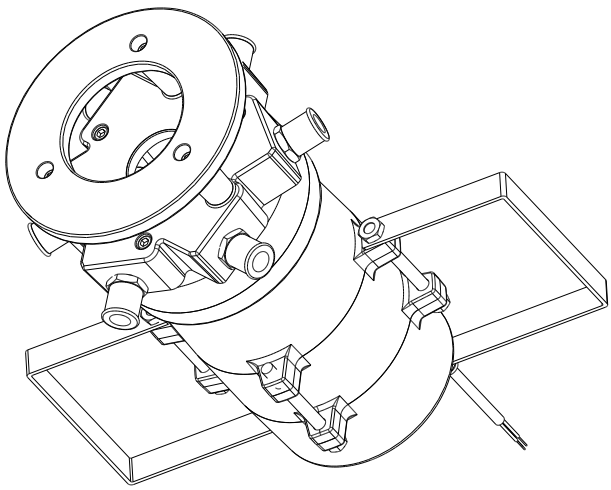

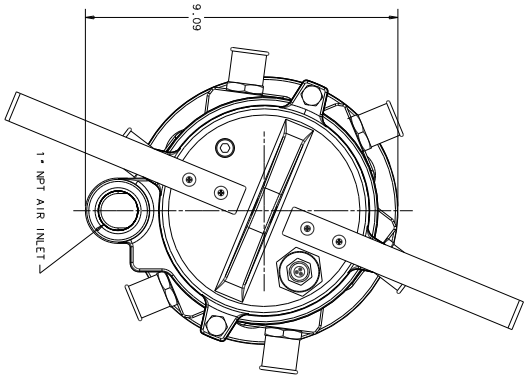


# Aero-Tech

## SA04 Submersible Aerator

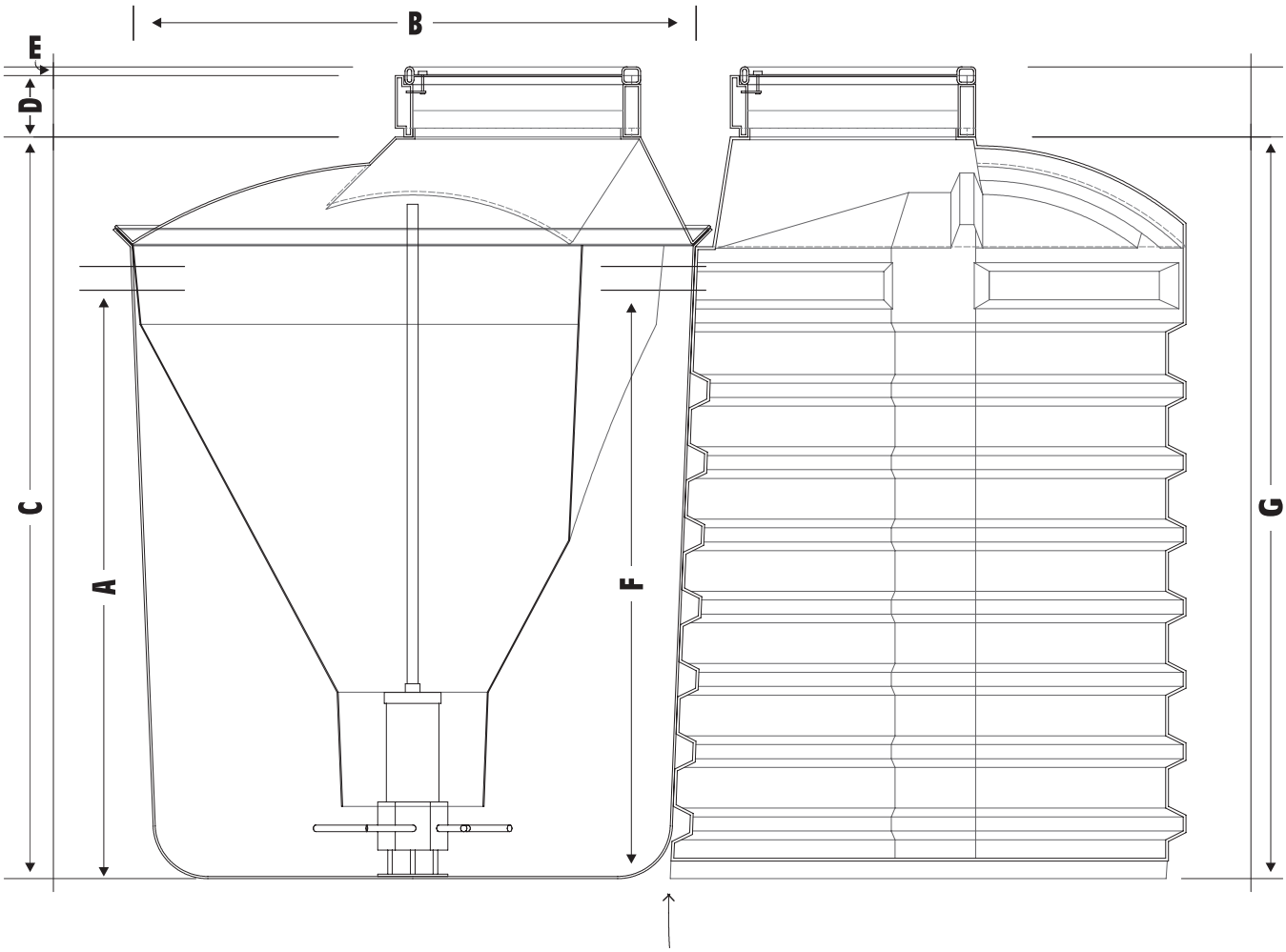


| MODEL | A | B | C | D | E | F | G |
|---|---|---|---|---|---|---|---|
| AT-500 | 66" | 64" | 84¾" | 6" | 1" | 66" | 84¾" |
| AT-600 | 66" | 64" | 84¾" | 6" | 1" | 66" | 84¾" |
| AT-750 | 66" | 72" | 84¾" | 6" | 1" | 66" | 84¾" |
| AT-1000 | 66" | 84" | 96¾" | 6" | 1" | 66" | 84¾" |
| AT-1500 | 72" | 96" | 96¼" | 6" | 1" | 72" | 90¾" |

ATU- Fiberglass
Wall and Lid Thickness shall be no less than ¼" thick
Pretreatment Tank can be
Polyethylene or Concrete

Patent Pending

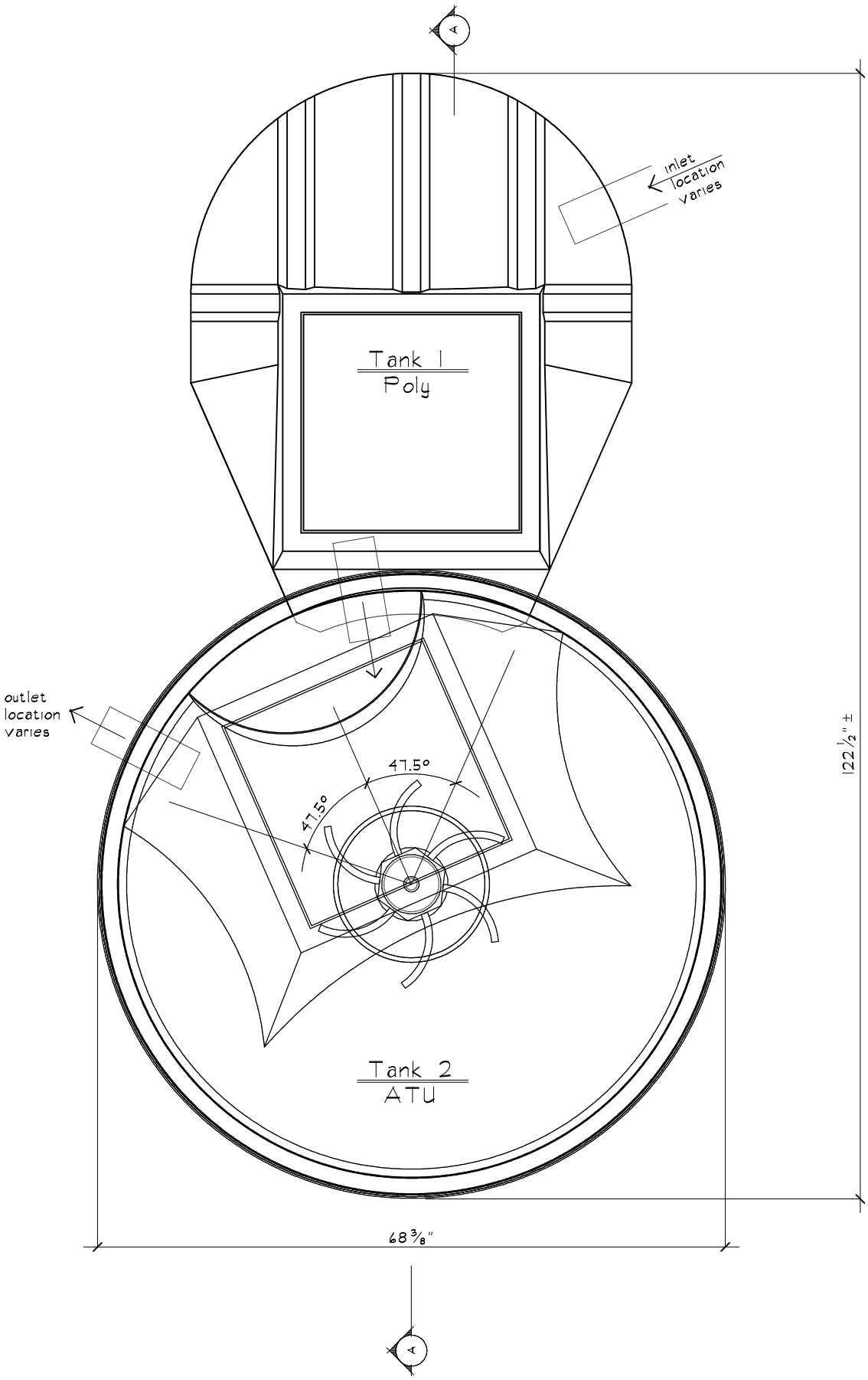
A
inlet
location
varies
Tank 1
Poly
outlet
location
varies
47.5°
47.5°
Tank 2
ATU
122 1/2" ±
68 3/8"
A

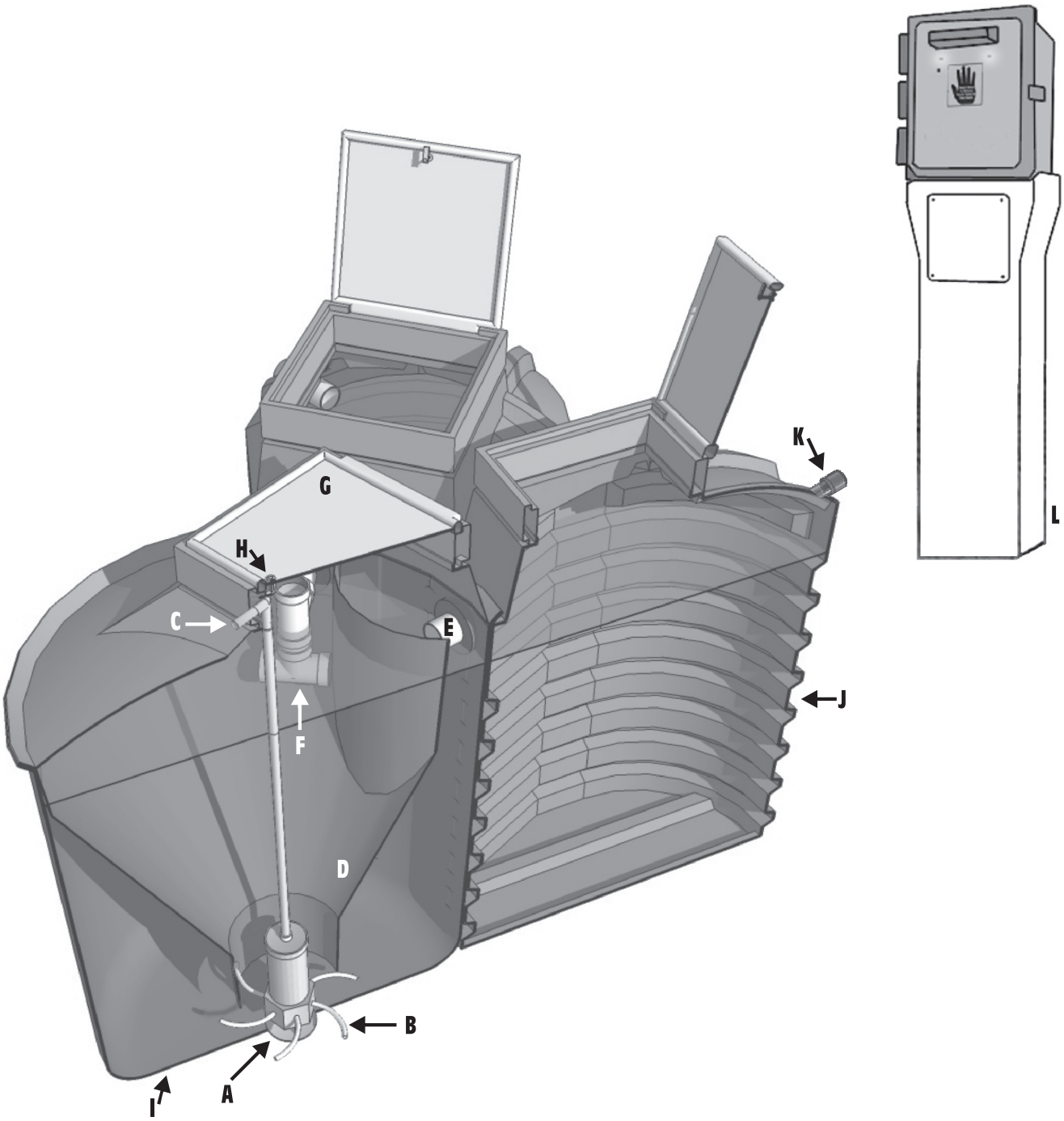


A. Submersible Aerator
B. Discharge Hoses
C. Air Intake
D. Clarifier
E. Inlet Pipe
F. Discharge Assembly Pipe
G. Hatch/Access Cover
H. Lock Assembly
I. Fiberglass Tank
J. Pretreatment Tank
K. Inlet From House
L. Control Panel

Patent Pending

# Aero-Tech
# Aerobic Treatment Units

**MODEL AT-500**
**CAPACITY 500 GPD**

**Aero-Tech**

Phone (574) 935-0908
2900 Gary Drive • Plymouth, IN 46563

NSF
CLASS 1

**SERIAL # _____**

Patent Pending

# Aero-Tech
# Aerobic Treatment Units

**MODEL AT-500** **CAPACITY 500 GPD**

**Aero-Tech**

Phone (574) 935-0908
2900 Gary Drive • Plymouth, IN 46563

NSF
CLASS 1

**SERIAL #** _____

Patent Pending

# ROUTINE SERVICE

If the control panel alarm light and/or buzzer are activated or your system needs repair or replacement parts, call your local service dealer. The name, address, and phone number should be noted on the front cover of the control panel. If the dealer information is missing, call AERO-TECH at 574-935-0908 for your nearest service dealer. Please refer to the data plate attached to the lid of the unit for the serial number in the event a problem occurs.

On-site inspections for proper operation and routine service for the first two years of service from the date of installation shall be performed by the dealer who installed your AERO- TECH Aerobic Wastewater Treatment System. The installer will inspect and service the system at no charge unless additional service is required that is not warranty related. After the first two years the dealer should offer a continuing service policy for a nominal yearly fee. Only service people trained and certified by AERO-TECH are allowed to maintain and service this unit.

The initial service contract and the extended service policies are requirements of the NSF/ANSI Standard 40 and the NSF International Certification Policies for Wastewater Treatment Devices. State or local regulations may require service or monitoring at more frequent intervals. Check with your state or local regulatory authority for current site specific laws that apply to your system.

In addition to your normal routine service, your system will require other services. The expected services associated with your system includes:

| | |
|---|---|
| 1. Clear the scum in the clarifier compartment | 6 months to 2 years |
| 2. Clear air vents on the control pedestal | 6 months to 2 years |
| 3. Repair or replace submersible aerator | 5 to 10 years |
| 4. Pump sludge from aeration tank | 2 to 5 years* |
| 5. Pump sludge from pretreatment tank | 2 to 4 years* |

*Sludge removed from any part of the system must be disposed of in accordance with all local, state, and federal laws and will be the owner's expense.

Shutting down your system for summer/winter homes or selling your home should be performed by your local service provider shortly after your home is vacated. The pumper or service provider shall pump the effluent from all of the tanks and immediately refill the tanks with water. Filling the tanks with water will insure that the tanks do not float or collapse while not in use and will be necessary for the re-start up for the next owners or new season. The power can be shut off at this time.

# INSTALLATION INSTRUCTIONS

In order to help insure that your Aero-Tech Aerobic Treatment System is installed properly, only factory authorized representatives should install this unit. Any modifications to the control panel, aerator, or the treatment plant will result in the loss of warranty and invalidation of the NSF certification. Please make sure that all instructions are followed. In the event that there is a problem that requires replacement of parts or components of the system, please contact the service provider listed on the control panel label or call AERO-TECH for your nearest provider.

In addition, all national, state and local plumbing and electrical codes will be followed. If

in doubt, please call the local building department or local health department for clarification. The control panel and aerator will be protected by a disconnect panel and appropriate breakers. In most cases this will be a 30 amp protection in the main electrical box. The plumbing will be 4″ PVC schedule 40 into the pre-treatment tank and also into the ATU. The outlet pipe will be sized according to code for the dispersal field requirements. A one and a half inch PVC air intake will run from the ATU to the control panel pedestal where it will terminate inside near the air vents. The vents should always be kept clear and free from dust, dirt, vegetation and anything else that could block air flow.

## AERO-TECH TANK INSTALLATION

1. Tank location: Locate the Aero-Tech Aerobic Wastewater Treatment Plant in an area that provides surface water run-off and good venilation. Do not locate the aerobic plant in low lying areas or where seasonal groundwater is high.
2. Excavation of site: Prepare the excavation hole that there is a minimum of six inches all around the tank. Do not over dig as this can cause more settling and shift the tank at a later time. The bottom of the tank should be dug level to allow sand fill to be added.
3. Additional two risers: Never bury the tank deeper than a depth that would require an additional two risers. Your Aero-Tech unit will come with one six inch riser attached from the factory. Never install the tank where more than 18 inches of total risers are required. If more than 18 inches of riser is required, install a lift station upstream of the unit to pump the effluent to the ATU at a normal grade. If a lift station is needed, contact Aero-Tech for sizing, location, and maximum flow and dosing requirements.
4. Level bottom w/ 6″ of sand fill: Before installing the tanks, place at least 6″ of compacted sand into the bottom of the hole. This is done to insure that no rocks or sharp objects come into contact with the bottom of the tank.
5. Lifting of tanks: Use the lifting eyes provided on the plant for placing the tanks into the excavation site. Never lift any of the tanks unless they are empty of all liquids. Always use a spreader bar and other devices that have been designed and tested by Aero-Tech.
6. Inlet connection: As the tank is being set, make sure the 4″PVC inlet is aligned with the outlet coming from the house.
7. Unit must be level: To insure proper functioning of the unit it must be level. To level the tank a 4′ level should be placed over the access opening. The tank can be shifted to make sure that is level in all directions.
8. Fill tanks: Once all tanks are level and properly positioned, begin filling them with clean water. As the tanks are filling, periodically check for level and water tightness on the tank and all fittings.
9. Hook up 4″ line. As the tanks are filling attach the 4″ incoming line from the house to the pretreatment tank. The Aero-Tech unit must be attached to a properly vented and plumbed structure that meets all local and state plumbing codes.
10. Backfill in 6″ lifts: While the tanks are filling with water, begin to fill the excavation site in six inch increments with material that will settle and compact around the unit. Tamp around the unit and use water as necessary to help settle the soil around the tank. Slope dirt so that all water run-off will flow from the installation.
11. Secure the access hatch by locking the tamper resistant latch.

12. Before completing backfill make sure that conduit and airlines have been laid to the control panel.

## AERO-TECH CONTROL PANEL INSTALLATION

1. Location of panel: Locate control panel and pedestal next to house in a visible location. Make sure that the control panel is visible and easily noticed by the occupants.
2. Secure control panel: Attach the control panel to the house using the correct length fasteners through the back of the panel. If the control panel/pedestal are to be free standing, a 8″ hole 18″ deep will have to be dug to allow for a 4″x 4″ treated post to be installed.
3. Place treated 4″x 4″ in hole and tamp  Slide pedestal over the post.  Anchor with 2″ galvanized screws.
4. Disconnect: A disconnect panel should be placed in line before the control panel. Run the 115 Volt 60Hz power from the disconnect box to the control panel, attaching them to the bottom of the L1, N, G terminals.
5. Wiring diagram: Use the wiring diagram provided for each version of the Aero-Tech Control Panel Model series.
6. Install air and power: Run 11/2″ schedule 40 airlines and 1″ schedule 40 power conduits into the bottom of the pedestal. The airline should extend to the bottom of the vents on the side of the pedestal. The conduit for the power lines should extend to approximately one foot above the ground level.
7. Connect the power lines from the aerator to the X1, N, G terminals on the power bar of the control panel.
8. Air bell: The 1/4″ air line from the air bell should be attached by pushing it on to the barb from air compressor.

## START UP PROCEDURES

After completing the Tank Installation and the Control Panel Installation, it is time to start your AERO-TECH Aerobic Treatment Unit. Please make sure you have read all instructions in this manual prior to use of this unit. It is extremely important that this start-up is done only by factory trained and certified people. If you have any questions, call, write or fax AERO-TECH.

1. Check to make sure that the tanks are filled with water. The submersible aerator is made to only run in liquid. Running your submersible aerator without being in water, can harm the seals, bearings and other parts of the motor. This will void your warranty.
2. Make sure that the disconnect panel is turned on. Check to make sure that the breakers are turned on in the control panel.
3. After turning on the submersible aerator, visually check to make sure that it is running. You will see air bubbles come to the surface inside the mixing chamber of the ATU indicating that the unit is on.
4. The high water alarm may come on, this consists of a light and horn on the control panel. The horn may be silenced by touching the hand outline on the front of the control panel. The light will stay on until the water is at a normal level.

5. If the unit fails to start, go through the start up procedures again. If there is no change, please call your local AERO-TECH dealer or the manufacturer for further instructions.

## PROPER PERMITTING

Aero-Tech units may only be installed after first obtaining all permits and approval from the local officials. All state and federal environmental laws and codes must be followed at all times. Under no circumstances should an Aero-Tech unit be installed by anyone other than licensed and certified Aero-Tech installers.

## INSPECTION/SERVICE PROCEDURE

The routine inspection and service can be performed easily and quickly by an AERO-TECH trained and certified technician. Due to different disposal methods, each site is unique and should be inspected as such. Please proceed with the following instructions.

1. After arriving at the site, use the tamper-proof latch key to unlock and open the hatch(es) on the unit.
2. Take a one liter sample of the activated sludge from the aeration chamber. Set the sample aside to allow it to settle while you perform the rest of the service.
3. Take a visual inspection of the mixed liquor in the aeration chamber. This should be chocolate brown in color and you should see the air bubbles rising to the top; while the clarifying chamber remains still.
4. The rising bubbles indicate that the submersible aerator is working properly.
5. If there is scum (dead bacteria) in the top of the clarifying chamber, take a small net of-fine mesh and scoop it back into the mixing chamber. This is still food for the bacteria.
6. During this time you should also be taking an olfactory (smell) test of the unit. There should be little or no smell to the system. There may be a small earthy loam smell and this will be normal. If there is a strong septic smell, proceed with the inspection to determine the cause.
7. At this time you will take sludge judge readings from all of the tanks to determine the level of sludge and also the health of the unit. Start by taking a reading in the pre-treatment tank. When the solids reach 24-28″ make arrangements for the tank to be pumped. Next take a reading in the aeration chamber of the ATU. When the solids reach a level of 3-4″ make arrangements for the tank to be pumped. If there is a pump tank, take a reading there also. When the solids reach 6-8″ make arrangements for the tank to be pumped. Make a note of all levels of sludge on your inspection report.
8. Shut off the breaker to the submersible aerator. The alarm should sound. Silence the alarm by pushing the “hand” sign on the front of the control panel. Reset the breaker at this time.
9. Make sure the air vents on the pedestal are cleared and free of dust lint and debris at this time.
10. Now return to the sample you pulled from the aeration chamber. Take a visual inspection of the sample for the amount of settleable solids and amount flock in the system. The sample should be a brown in color if operating correctly. If the mixed liquor sample is gray or black it is operating in an anaerobic condition is not desirable.
11. Take a sample of the system effluent. The effluent should be clear with few light brown

solids in suspension. If the color is dark or turbid or is clear with a great deal of light brown solids the system is not working properly.

12. Effluent samples must be taken as the effluent enters the pump tank or a sample port must be added downstream. The sample port should be installed so that effluent cannot remain below the discharge water line and build up solids.
13. To meet NSF Standard 40 the effluent should be less than 25mg/l CBOD and less than 30mg/l TSS with a PH range of 6-9.

## FIVE YEAR LIMITED WARRANTY

**AERO-TECH** WASTEWATER SYSTEMS warrants each **AERO-TECH** Aerobic Wastewater Treatment System to be from defects in material and workmanship for a period of five years from the date of sale by an authorized **AERO-TECH** dealer when the unit is properly registered with **AERO-TECH**. The sole remedy under the LIMITED WARRANTY is as follows: **AERO-TECH** may at its sole option, replace or exchange any component part F.O.B. factory, that in **AERO-TECH'S** judgment shows evidence of defects in material or workmanship, provided said component part has been paid for and is returned through an authorized **AERO-TECH** dealer transportation prepaid, to **AERO-TECH** at 2900 Gary Drive, Plymouth, IN 46563. The warrantee must also specify the nature of the defect to the manufacturer. The LIMITED WARRANTY does not make a provision for an informal dispute settlement agreement.

The warranty does not cover treatment processes/systems that have been flooded, by external means, or that has been disassembled by unauthorized persons, improperly installed, subjected to external damage, or damage due to altered or improper wiring or overload protection.

Recommendations for special applications will be based on the best available expertise of **AERO-TECH** and published industry information. Such recommendations do not constitute a warranty of satisfactory performance under the end user's specific conditions.

This warranty applies only to the treatment system and does not include any residential wiring, plumbing, and drainage, installation of system or disposal system. **AERO-TECH** is not responsible for any delay or damages caused by defective components or materials, for loss incurred because of interruption of service, or for any other special or consequential damages or incidental expenses arising from the manufacture, sale or use of the system.

**AERO-TECH** reserves the right to revise, change, or modifies the construction and design of the treatment system or any component part thereof, without incurring; any obligation to make such changes for modifications in previously sold equipment. **AERO-TECH** also reserves the right, in making replacements of component parts under this warranty, to furnish a component part, which, in its judgment, is equivalent to the company part, replaced.

Under no circumstances will **AERO-TECH** be responsible to the warrantee for any other direct or consequential damages, including but not limited to lost profits, lost income, labor charges, delays in production, and or idle production, which result from defects in material and/or workmanship of the system. Some states do not allow the exclusion or limitation of incidental or consequential damages, so the above limitation or exclusion may not apply to you.

This warranty is expressly in lieu of any other expressed or implied warranty, merchantability, or fitness, and of any other obligation on the part of **AERO-TECH**.

# Aero-Tech
# Aerobic Treatment Units

## WARRANTY REGISTRATION

**Aero-Tech**

574-935-0908 • 2900 Gary Drive • Plymouth, IN 46563

The dealer must file this form with Aero-Tech within 30 calendar days after the installation of the unit or all warranties are void.

Owner/User: _____

Address: _____

City/State/Zip: _____ Phone: _____

Dealer/Installer: _____

Address: _____

City/State/Zip: _____ Phone: _____

Distributor: _____

Service will be performed by: _____

Name: _____

City/State/Zip: _____ Phone: _____

Type of installation: _____ Residential ____ Commercial ____

Number of occupants: _____ Garbage disposal: Yes ____ No ____

Date installed: _____

Plant Model number: _____ Control Panel number: _____

Plant Serial number: _____ Air Pump Serial number: _____

Effluent disposal method and equipment used: _____

Authorizing Agency: _____

Sanitarian: _____

Address: _____

City/State/Zip: _____ Phone: _____